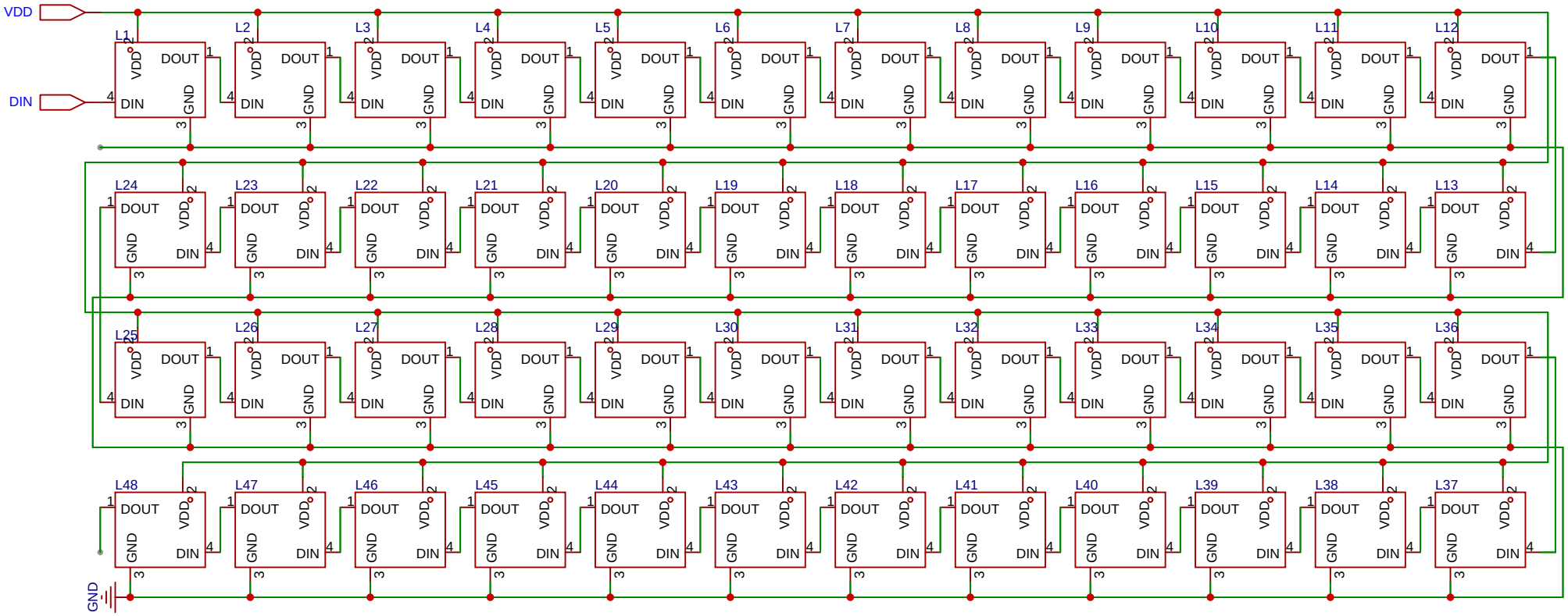

Schematic	LED Ships Wheel	Update Date	2024-05-27
		Create Date	2024-05-26
Page	1mm_ws2812b	Part Number	
Drawed		ArmWheel	
Reviewed			
		VER	SIZE	PAGE 1 OF 1

EasyEDA